83486
C B LORING

U.S. COAST GUARD CUTTERS

C.G. 65-71

No. 65 GEORGE W. CAMPBELL
No. 66 SAMUEL D. INGHAM
No. 67 WILLIAM J. DUANE
No. 68 ROGER B. TANEY
No. 71 GEORGE M. BIBB
No. 69 ALEXANDER HAMILTON
No. 70 JOHN C. SPENCER

RESTRICTED

NUMBER & ORDER OF SHEETS	
1	COVER & TITLE PAGE
2	OUTBOARD PROFILE
3	INBOARD PROFILE
4	BRIDGES
5	MAIN DECK
6	SECOND DECK
7	PLATFORM DECK
8	HOLD

CORRECTED TO SUIT SHIP		
PLACE	DATE	CONSTRUCTION OFFICER

BOOKLET
OF
GENERAL PLANS
PREPARED AT NAVY YARD, PHILADELPHIA

DRAWN BY T.K. MORGAN
TRACED BY T. MORGAN
ASSOC. NAV. ARCH. HILL
NAVAL ARCH. CH. OF DIV. ____________
DATE ____________

____
PRIN. NAVAL ARCHITECT

____
CONSTRUCTOR U.S.C.G.

____
CAPTAIN (CC) U.S.N. MANAGER

C.G. 6571-0101-20 SHEET No. 1 OF 8

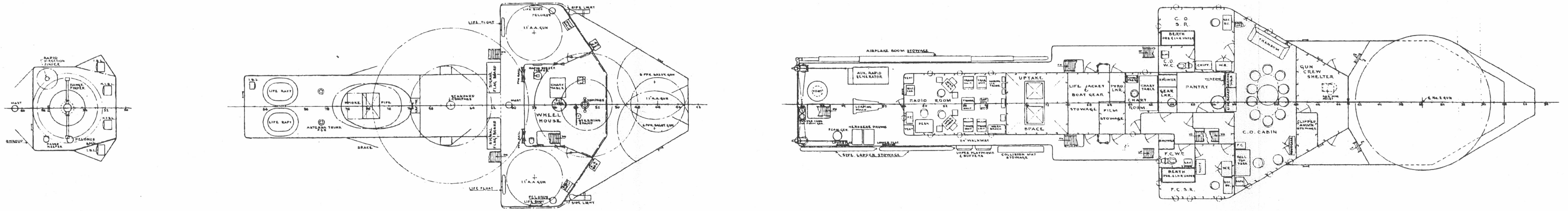

RADIO DIRECTION FINDER
RANGE FINDER
MAST
PELORUS
RANGE KEEPER
SHROUD
I.B.L.
LIFE RAFT
ANTENNA TRUNK P&S
SMOKE PIPE
BRACE
STANDARD COMPASS
SIGNAL FLAG BOARD
LIFE FLOAT
LIFE BUOY
SIDE LIGHT
1.1" A.A. GUN
CHART TABLE
WHEEL HOUSE
COMPASS
STEERING STAND
6 PDR. SALUTE GUN
AIRPLANE BOOM STOWAGE
AUX. RADIO GENERATOR
VENT
LOADING MACH.
FOAM GEN.
KEROSENE DRUMS
SIDE LADDER STOWAGE
RADIO ROOM
DESK
24" WALKWAY
UPPER PLATFORMS & BUFFERS
COLLISION MAT STOWAGE
UPTAKE SPACE
LIFE JACKET & BOAT GEAR STOWAGE
PYRO LKR.
FILM STOWAGE
CHART TABLE
CHART ROOM
SHOWER
GEAR LKR.
PANTRY
C.O. S.R.
BERTH
C.O. W.C.
CHIFF.
W.R.
TRANSOM
C.O. CABIN
F.C. W.C.
F.C. S.R.
ROLL TOP DESK
GUN CREW SHELTER
CLIPPER AMMN. STOWAGE
No. 2 GUN

U.S. COAST GUARD CUTTERS
CG. 65-71
BRIDGES
SCALE = 1/8" = 1 FT.

C.G. 6571-0101-20 SHEET No. 4 OF 8

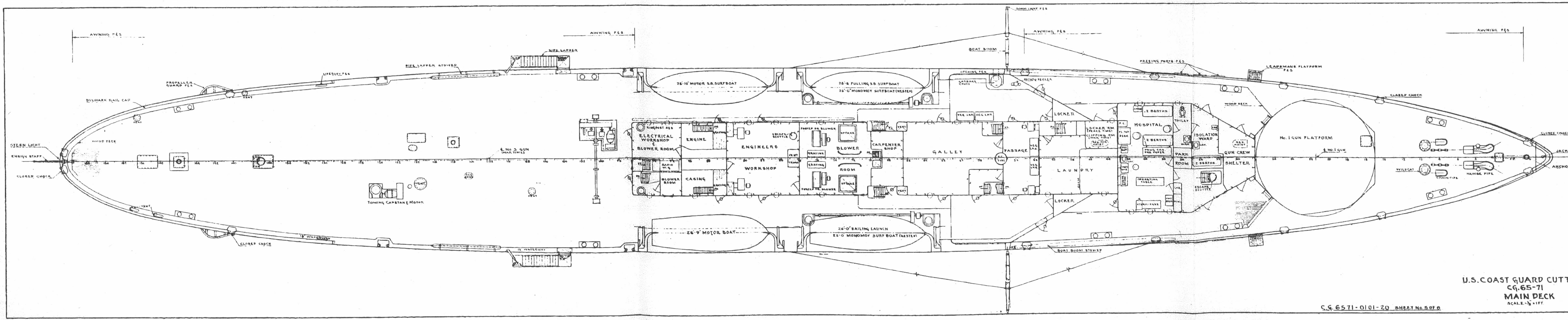

AWNING P&S
SIDE LADDER
SIDE LADDER STOWED
LIFEBUOY P&S
PROPELLER GUARD P&S
BULWARK RAIL CAP
VENT
WOOD DECK
STERN LIGHT
ENSIGN STAFF
CLOSED CHOCK
No. 3 GUN (WAR TIME)
TOWING CAPSTAN & MOTOR
18" WATERWAY
12" WATERWAY
ELECTRICAL WORKSHOP & BLOWER ROOM
RADIO W.S.
BLOWER ROOM
ENGINE CASING
ENGINEERS WORKSHOP
ESCAPE SCUTTLE
FORCED DR. BLOWER
BLOWER ROOM
UPTAKE
GRATING
CARPENTER SHOP
GALLEY
PASSAGE
VEG. LKR.
LOCKER
LAUNDRY
LOCKER RM. (PEACE TIME)
CLIPPING RM. (WAR TIME)
HOSPITAL
2 BERTHS
OPERATING TABLE
STERILIZERS
TOILET
ISOLATION WARD
PARK ROOM
GUN CREW SHELTER
ESCAPE SCUTTLE
26'-10" MOTOR S.B. SURFBOAT
26'-6 PULLING S.B. SURFBOAT
26'-0" MONOMOY SURFBOAT (NESTED)
26'-9" MOTOR BOAT
26'-0" SAILING LAUNCH
BOOM LIGHT P&S
BOAT BOOM
BOAT BOOM STOWED
GARBAGE CHUTE
POTATO PEELER
OPENING P&S
FREEING PORTS P&S
LEADSMANS PLATFORM P&S
No. 1 GUN PLATFORM
No. 1 GUN
WILDCAT
CHAIN PIPE
HAWSE PIPE
JACK STAFF
ANCHOR DAVIT

U.S. COAST GUARD CUTTERS
CG. 65-71
MAIN DECK
SCALE = 1/8" = 1 FT.

C.G. 6571-0101-20 SHEET No. 5 OF 8

GENERAL INFORMATION

LENGTH BETWEEN PERPENDICULARS	308'-0"
LENGTH OVER ALL	327'-0"
BREADTH MOLDED EXTREME (FRS 76-73) AT DWL	41'-0"
DRAFT ABOVE BOTTOM OF KEEL (DESIGNED)	12'-6"
RUDDER AXIS	FR 146
CENTER OF PROPELLERS	FR 142
CENTER OF STRUTS	5'0" FWD FR 14
DISTANCE BETWEEN FOREMAST AND STUBMAST	11'9"

HEIGHT ABOVE D.W.L. (12'6" ABOVE BOTTOM KEEL)

TOP OF FLAG & PENNANT STAFF CAP FOREMAST	114' 7⅞"
TOP OF STUBMAST	51'-0 3/16"
TOP OF TRUCK LIGHT FOREMAST	112' 2½"
ELECTRIC RANGE LIGHT	74'-0"
ELECTRIC MASTHEAD LIGHT	53'-0"
MAIN DECK AT STERN	13'-10¼"
UPPER DECK ABOVE MAIN DECK (MOLDED)	7'9"
NAVIGATING BRIDGE ABOVE UPPER DECK (MOLDED)	9'3"

COMPLEMENT

FORCE COMMANDER	1
CAPTAIN	1
WARDROOM	9
WARRANT OFFICERS	4
CHIEF PETTY OFFICERS	14
ENLISTED MEN	98
TOTAL =	127

SMALL BOATS

		EACH	TOTAL
1	26'-0" SAILING LAUNCH		
1	25'-6" PULLING S.B. SURFBOAT		
2	26'-0" MONOMOY SURFBOAT		
1	26'-6" MOTOR BOAT		
1	25'-10" MOTOR S.B. SURFBOAT		
	TOTAL ACCOMMODATION		

FIRE PLUGS

MAIN DECK	4	ENGINE ROOM	1
2ND. DECK	5	AUX. MACH. ROOM	1
BOILER ROOM	1	TOTAL:	12

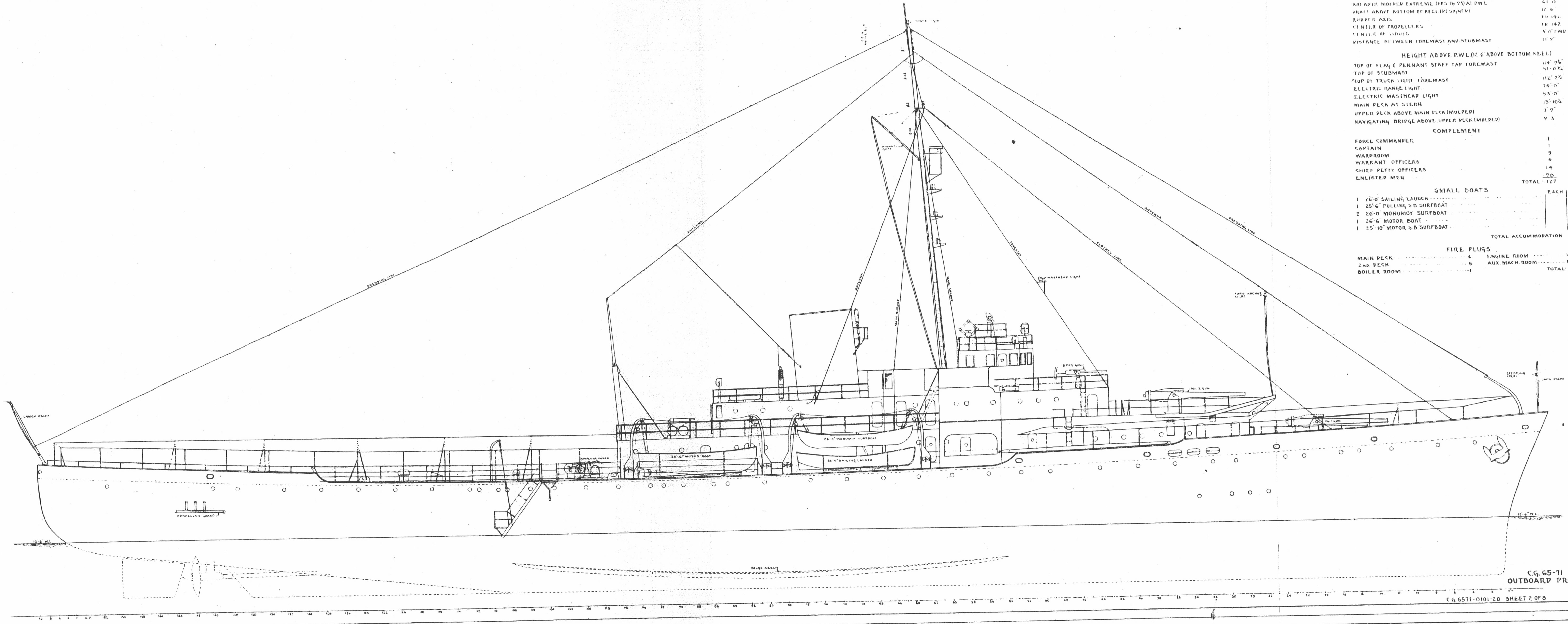
ANCHOR LIGHT
ENSIGN STAFF
PROPELLER GUARD
12'-6" W.L.
BILGE KEEL
AIRPLANE WINCH
26'-6" MOTOR BOAT
26'-0" MONOMOY SURFBOAT
26'-0" SAILING LAUNCH
ANTENNA
MAIN SHROUD
FORESTAY
CLOTHES LINE
DRESSING LINE
MASTHEAD LIGHT
TRUCK LIGHT
6 PDR GUN
No. 2 GUN
No. 1 GUN
FORD ANCHOR LIGHT
STEERING LIGHT
JACK STAFF
F.P.
A.P.

C.G. 65-71
OUTBOARD PROFILE

C.G. 6571-0101-20 SHEET 2 OF 8

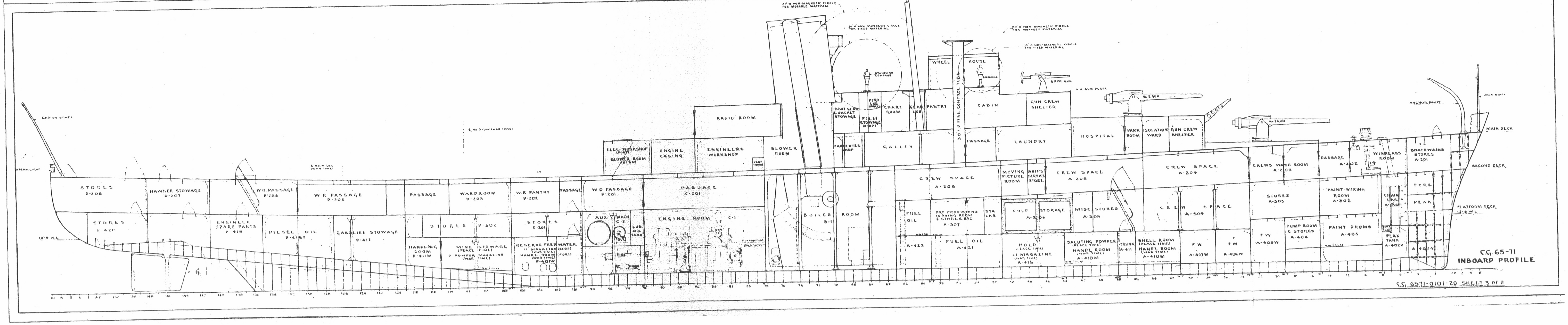
ENSIGN STAFF
STERN LIGHT
12'-8" W.L.
℄ No. 4 GUN (WAR TIME)
℄ No. 3 GUN (WAR TIME)
STORES D-208
HAWSER STOWAGE D-207
W.R. PASSAGE D-206
W.R. PASSAGE D-205
PASSAGE
WARDROOM D-203
W.R. PANTRY D-202
PASSAGE
W.O. PASSAGE D-201
PASSAGE C-201
STORES D-420
ENGINEER SPARE PARTS D-418
DIESEL OIL D-415F
GASOLINE STOWAGE D-412
STORES D-302
STORES D-301
HANDLING ROOM D-411M
MINE STOWAGE (PEACE TIME) & POWDER MAGAZINE (WAR TIME)
RESERVE FEED WATER (STBD) (PORT)
11" MAGAZINE (WAR TIME)
HANDL. ROOM (WAR TIME) D-401W
AUX. MACH. C-2
LUB. OIL TANK
ENGINE ROOM C-1
ELEC. WORKSHOP (PORT)
BLOWER ROOM (STBD)
ENGINE CASING
ENGINEERS WORKSHOP
VENT TRUNK
RADIO ROOM
BLOWER ROOM
BOILER ROOM B-1
30'-0" NON-MAGNETIC CIRCLE FOR MOVABLE MATERIAL
10'-0" NON-MAGNETIC CIRCLE FOR FIXED MATERIAL
20'-0" NON MAGNETIC CIRCLE FOR MOVABLE MATERIAL
10'-0" NON-MAGNETIC CIRCLE FOR FIXED MATERIAL
STANDARD COMPASS
BINNACLE
WHEEL HOUSE
6 PDR GUN
A.A. GUN PLATF.
No. 2 GUN
No. 1 GUN
BOAT GEAR & JACKET STOWAGE
PYRO LKR (PORT)
FILM STOWAGE (STBD)
CHART ROOM
GEAR LKR
PANTRY
30" F.P. FIRE CONTROL TUBE
CABIN
GUN CREW SHELTER
CARPENTER SHOP
GALLEY
PASSAGE
LAUNDRY
HOSPITAL
DARK ROOM
ISOLATION WARD
GUN CREW SHELTER
CREW SPACE A-206
MOVING PICTURE ROOM
SHIPS SERVICE STORE
CREW SPACE A-205
CREW SPACE A-204
CREWS WASH ROOM A-203
PASSAGE A-202
WINDLASS ROOM
BOATSWAINS STORES A-201
FUEL OIL
DRY PROVISIONS ISSUING ROOM & STORES, ETC. A-307
STA. LKR.
COLD STORAGE A-306
MISC. STORES A-305
CREW SPACE A-304
STORES A-303
PAINT MIXING ROOM A-302
CHAIN LKR. A-301
FORE PEAK
A-423
FUEL OIL A-421
HOLD (PEACE TIME) 11" MAGAZINE (WAR TIME) A-415
SALUTING POWDER (PEACE TIME) HANDL. ROOM (WAR TIME) A-410M
TRUNK A-411
SHELL ROOM (PEACE TIME) HANDL. ROOM (WAR TIME) A-410M
F.W. A-407W
F.W. A-406W
F.W. A-405W
PUMP ROOM & STORES A-404
PAINT DRUMS A-403
PEAK TANK A-402V
A-401-V
ANCHOR DAVIT
JACK STAFF
MAIN DECK
SECOND DECK
PLATFORM DECK 12'-4" W.L.

C.G. 65-71
INBOARD PROFILE

C.G. 6571-0101-20 SHEET 3 OF 8